PROJECT NO.
22071

"WASHINGTON BAR"
1400 WASHINGTON BLVD, DETROIT, MI

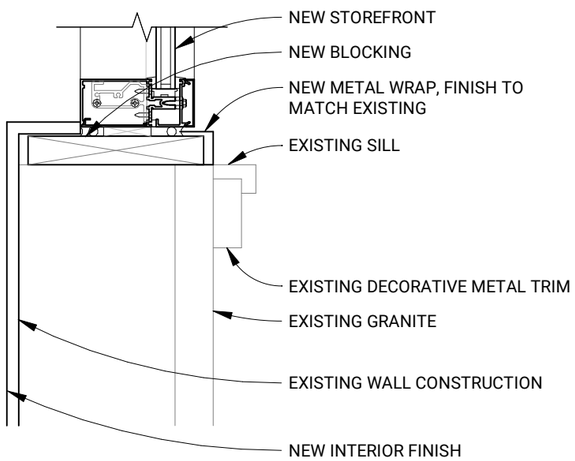

2 TYP **SILL DETAIL**
1 1/2" = 1'-0"

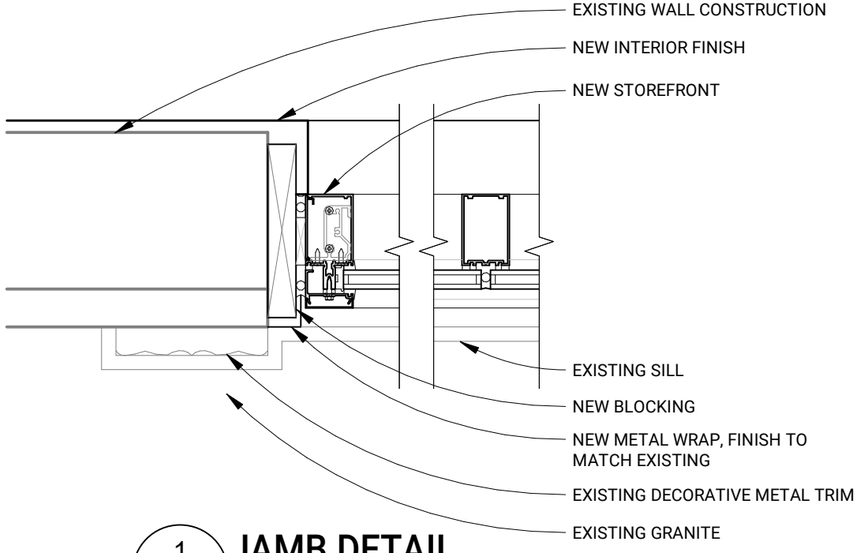

1 TYP **JAMB DETAIL**
1 1/2" = 1'-0"

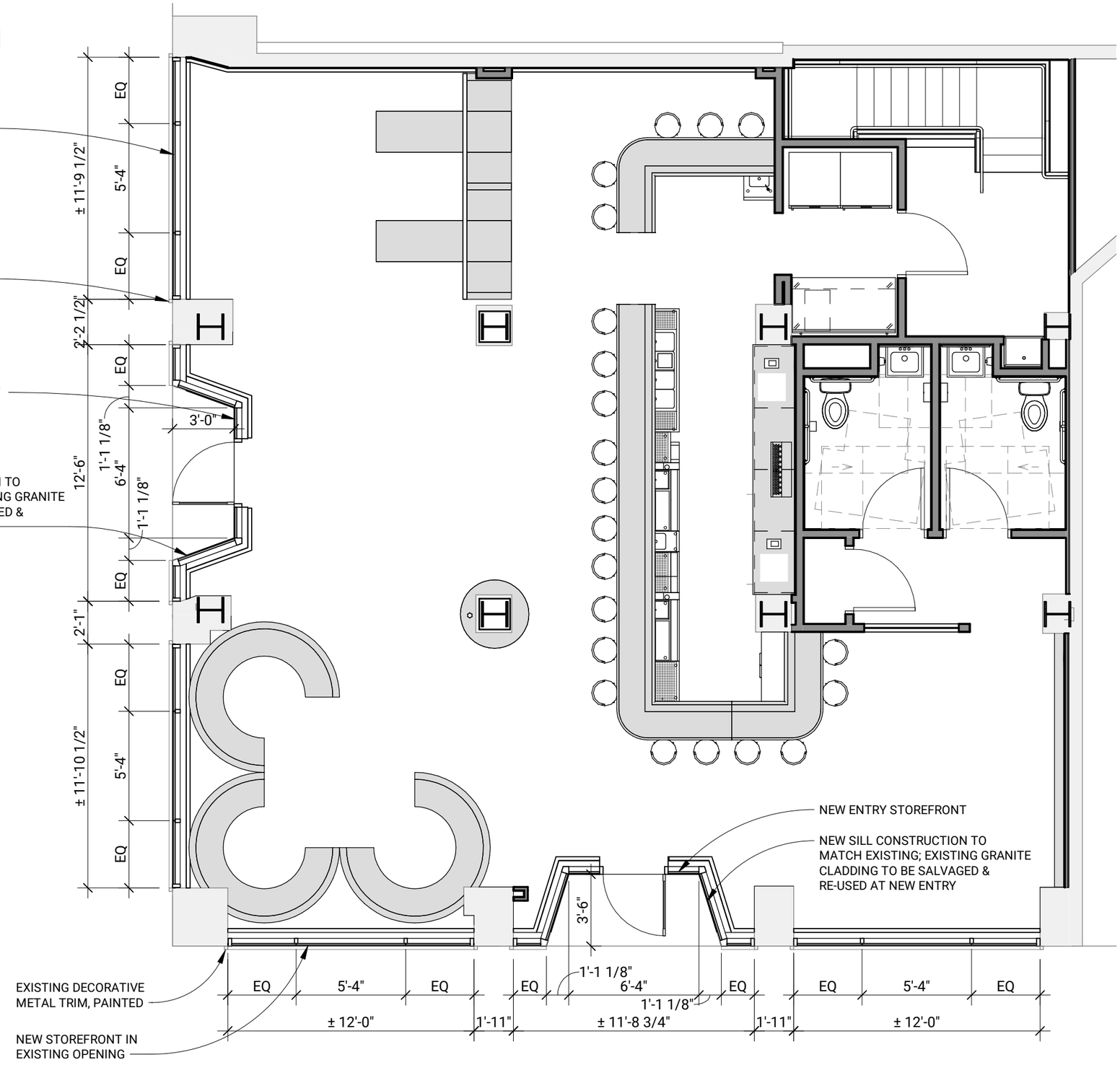

FIRST FLOOR PLAN - SCHEMATIC
HISTORIC DISTRICT COMMISSION REVIEW: 04.03.24

STUDIODETROIT ARCHITECTS